ISSN 2395-1621

Design and Analysis of Stuffing Box Used in Reciprocating Pump

#1Pushkar Sinkar,#2 Anand Bapat, #3Abhijeet Deshpande

1psinkar2564@gmail.com
2dkolben11@gmail.com
3abhijit.deshpande32@gmail.com

#13Mechanical Engineering Department, Pune University
VIIT, Pune
#2Dampf-Kolben Engg. Corporation
Singhgad Road Pune

ABSTRACT

The conventional pumps presently manufactured by company essentially consist of three different components on hydraulic side. The hydraulic end is made out of Suction Chamber, Delivery Chamber, and a Valve Box. All these components are tied together by using two vertical tie bolts. In the present design, the valve assemblies are housed inside the valve box. The majority of problems focussed in this kind of equipment are related to cleaning of valve assemblies. This happens, as the clearances inside the liquid passages of the pump are narrow, which results in blocking of valve assemblies. To clean these valve assemblies in the present design, the suction and delivery pipeline have to be dismenteled. American Petroleum Institute (API-674) is a standard that provides essential guidelines to the reciprocating pump manufactures especially for the application in various types of refineries.The standard instructed manufactures to come out with a revised design of hydraulic end, which can offer access to the valve assemblies without dismentling suction and discharge pipelines. This reduced the maintenance time of the pump where continious running of all the equipments is essential. Based on the API standards, the new design of single piece hydraulic block is proposed. This design reduced the number of joints between hydraulic components there by limiting the possibilities of leakages at high pressure. The modelling of hydraulic end will be done using CATIA V-5. Static stress analysis of hydraulic end is carried out in ABAQUS. The principal stresses and deformation values from ansys are validated with analytical calculations.

Keywords— **API standards, Hydraulic End, Reciprocating Pump, Stuffing Box.**

ARTICLE INFO

Article History

Received :18th November 2015

Received in revised form :

19th November 2015

Accepted : 21st November , 2015

Published online :

22nd November 2015

I. INTRODUCTION

A pump is a device that moves fluids (liquid or gases) by mechanical action. A reciprocating pump is a positive plunger pump. It is often used where relatively small quantiy of liquid is to be handled with higher delivery pressure. The most common form of reciprocating pump is the positive displacement type. This type of pump traps a fixed volume of fluid and displaces it from suction condition to discharge condition by means of check valves placed in series. These check valves ensure fluid movement in one direction from pump suction towards the pump discharge. Since fixed volume of fluid is displaced, the rate of flow is directly proportional to speed of the pump. Capacity of pump can also improved by using pump with multiple plungers or pistons. Fig.1 shows the performance curves for centrifugal and reciprocating pump.

It is observed from the figure that in centrifugal pump there is head discharge curve but for reciprocating pumps, because of fixed discplaced volume per pump revolution

and fact that pressure is indepedant of pump speed and flowrate, thre is no head-discharge curve for these machines.

II. HYDRAULIC END OF THE PUMP

a The hydraulic end consists of the cylinder, the pumping element (plunger or piston), the valves, the stuffing box, the manifolds and access covers.

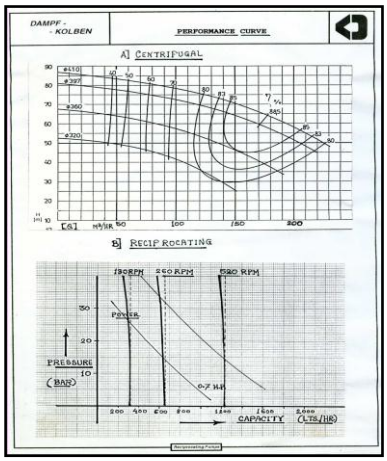

Fig.1 Performance Curve – Centrifugal and Reciprocating Pumps

A. Cylinder(Valve Box)

The cylinder (Valve Box) is the body where the pump pressure is developed. It is continuosly under fatigue. Cylinders on many horizontal pumps have suction and discharge manifolds integral with the cylinder. In recent years, duplex stainless steels have seen an increase in usage when higher strength and corrosion resistance is required. During each plunger cycle, the developed pressure goes from suction pressure to discharge pressure and back to suction. For a pump, operating at 360 strokes per minute, over six million fatigue cycles will occur in less than 12 days.

B. Plungers

The plunger transmits the force that develops the pressure. It is normally solid construction of up to 125 mm diameter. Above that dimesion, it is made hollow to reduce weight. A small diameters plunger is used for 400 bar and above that is reviewed for possible buckling. The some plungers are made of heat-treated or casehardened steel; the most common are the hard-coated or solid ceramic. [1]

C. Stuffing Box

Stuffing Box assembly consists of a stuffing box, upper and lower bushings, packing and a gland. For ease of maintaince, the stuffing box assembly is usually removable as shown in Fig.2.

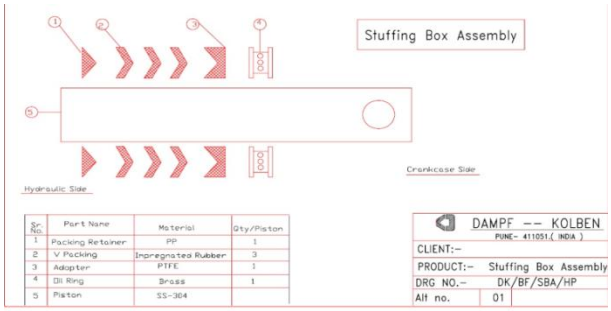

Fig. 2 Stuffing Box

Either packing is of square cross section, woven construction or moulded V shaped. A packing set consist of top and bottom adapters and one or more packing sealing rings. A stuffing box is used for two to five rings of packings, depending on the pressure and the fluid being pumped. Packing rings are usually made up of a number of composite materials selected for their strength and wear resistance.

The stuffing box for the piston rod of a double-acting pump is similar in construction to that of a stuffing box for a plunger. The primary difference is that it must seal against pressure being developed while the rod moves back through the packing. Single-acting pistons do not employ a stuffing box. Leakage past the piston-sealing rings goes into the frame extension to mix with the continuously circulating lubricant. [1]

Mohammed Diany et al proposed a simplified analytical approach, using the theory of thick-walled cylinders to analyze the stresses and displacements in stuffing box systems. The model developed was used to predict contact stresses between packings and piston in relation with material, friction coefficient, and load acting. Therefore, this analysis could be used as an effective tool for designing stuffing box packing. [2]

Song Pengyun et al represented a theoretical analysis for design of soft packed stuffing box seal by using lateral pressure coefficients K_i (between packing and stem) and K_0 (between packing and housing).

From this theoretical analysis they conclude that, packing is very narrow if coefficient of friction between packing and housing is equal to coefficient of friction between packing and housing ($\mu_i=\mu_0$). When shear forces in packing are not negligible, the relation of K_i and K_0 should determine by experiment. [3]

YA. Z. Gaft et al suggested mechanism of sealing in shaft stuffing boxes using finite element method. They analyze the actual contact zone between the packing and shaft. The deformation of the packing and stresses developed are evaluated theoretically. The tightness of the seal is observed for different fluids and contact pressure through which contact zone between packing and shaft was analysed.

It was observed that the procedure developed for contact pressure calculation, based on the finite element method, makes it possible to analyze the influence on the functioning of a stuffing box seal of design variables. The results obtained by finite element method

validate experimentally. This confirms the validity of the adopted model of the sealing mechanism for a stuffing box seal. These results can be used for predicting the intensity of wear of a compression packing. [4]

W. Ochonski analysed theoretically and experimentally the distribution of radial stresses at the packing-stem and the packing housing interfaces. The author proposed design procedure for plaited PTFE-impregnated asbestos packing. Through experimental results, it was observed that for the plaited packing, the lateral pressure coefficient of the packing against the stem is higher than the lateral pressure coefficient against the housing. For plaited packing, the radial stress at packing interface is higher than that of packing housing interface. [5]

D. Stuffing Box Sealing

Packing is compressed axially into the stuffing box so that it will expand radially and seal against the bore of the stuffing box, onto the pump shaft. One very important condition necessary for reliable seal operation is the control of the environment in which the seal is located. The leakage of the liquid along the shaft from the pump casing was minimized by use of packing. Packing is compressed axially into the stuffing box so that it will expand radially and seal against the bore of the stuffing box and onto the pump shaft. Due to friction between shaft and packing, some amount of leakage is essential to lubricate and cool the area. Therefore, it shows that function of packing is not to eliminate leakage, but to restrict the amount of leakage. Fig.3 shows packed stuffing box.

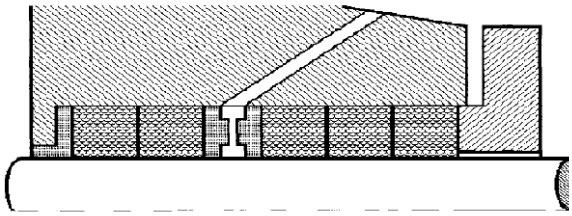

Fig.3 Packed Stuffing Box

From cost point of view, packing is relatively inexpensive. Packing can be easily replaced without dissassembly of the pump. However, after certain time wear of packing take place so it lowers the pump efficiency. To avoid this packing and sleeve require regular replacement. The regular adjustment of the packing can be done by using gland nut.

One very reliable condition for reliable seal operation is the control of the environment in which seal is located. Many pumps are equipped with stuffing box cooling jacket that can be used to cool a high temprature liquid.

Even with the cooling jacket, an excessively hot liquid may disturb the other parts of the seal. To avoid this situation system uses the high-pressure fluid at discharge nozzle of the pump and recirculates it in to the stuffing box. To reverse the flow to the seal certain modification to the recirculation line are required. Such as addition of orifice, strainer etc. This will ensure that liquid will deliver to the seal, in such a manner to improve the lubrication, pressure or temprature condition at the seal faces. [6]

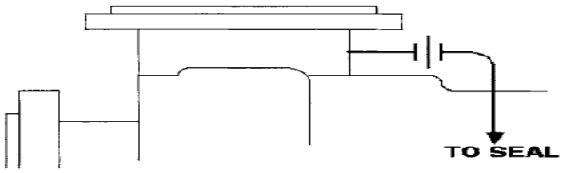

Fig. 4 Seal Circulation Diagram.

Reverse flow arrangement moves the liquid in the stuffing box to the pump suction as shown in Fig.5. This can be very effective in removing heat generated by the faces from seal area.

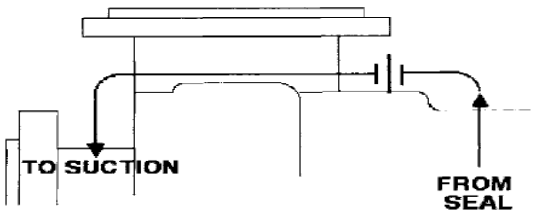

Fig. 5 Recirculation to Suction

E. Valves

Many types of valve designs exist. Which type is used depends on the application. The main parts of a valve assembly are the seat and sealing member, usually a disc, ball, or plate. A spring or retainer controls the plate movement. The seat usually uses a taper where it fits into the cylinder or manifold. The taper not only gives a positive fit but permits easy replacement of the seat. Some pumps use same size suction and discharge valve for interchangability. Some use larger suction valve than discharge valvesfor improved Net Positive Suction Head (NPSH) reasons. The valve springs must be made of corrosion-resistant material and designed to withstand high-cycle fatigue stresses.

F. Suction and Delivery Chambers

These are the chambers where the liquid is collected for distribution before or after passing through the cylinder. In horizontal pumps and some vertical pumps, the manifolds are cast or machined integral with the fluid cylinder. The velocity through the manifolds of a clean liquid is 0.9 to1.5 m/s at the suction and 1.8 to 4.9 m/s at the discharge. Suction and discharge manifold velocities in a slurry service are1.8 to 3 m/s.

A water hammer creates an additional pressure (which is added to the rated pump pressure), as does hydraulic shock loading. The discharge manifold rating is then made equal to or greater than the sum of these pressures. [1]

III. DESIGN OF PUMP

The pump has to be designed for the following specification

TABLE I

Sr. No	Parameter	Value

1	Pressure	40 Bar
2	Discharge	720 liters / hr

A. *Piston Diameter and Stroke*

$$Q = \frac{\pi}{4} \times D^2 \times S \times n \times N \qquad (1)$$

Assume stroke = 12 mm

$$\frac{720}{3600} = \frac{\pi}{4} \times D^2 \times 0.012 \times 3 \times \frac{950}{60}$$

D = 0.02136 m
D = 21.36 mm == 22 mm

B. *Design of Hydraulic End*

Conventionally, the hydraulic end is constructed of three separate parts, namely suction chamber, valve box and delivery chamber. As per the API norms, the entire hydraulic end is integrated into one entity. The hydraulic end is machined out of SS-304 block. Suitable cavities are machined to accommodate valve seat assemblies along with the sealing PTFE washers. The hydraulic end is as shown in Fig. 6.

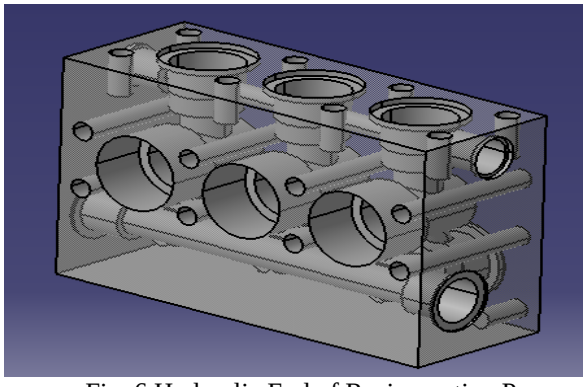

Fig. 6 Hydraulic End of Reciprocating Pump

C. *Design of Stuffing Box*

The stuffing box is important portion of the pump, which separates the high and low-pressure zone inside the pump from the atmosphere. The main components inside stuffing box are:

a) Packing Retainer: - This is metallic or non-metallic bottom most components. Based on the piston diameters selection of packing retainer sizes takes place. Packing retainer is made from Poly Tetra Fluro Ethylene (PTFE).

b) Gland Washers: - V groove type gland washers are used. These are made out of Hydrogenerated Nitrile Butadiene Rubber (HNBR), which offers required mechanical strength.

c) Adapter: - Adapters are made from PTFE where as oil ring is machined out of a brass tube.

IV. ANALYSIS OF HYDRAULIC END

a Analysis of hydraulic end is done by using ANSYS 14.5 ana ABAQUS. The geometry that has already been generated in CATIA V-5(R-20) is reused for building finite element model. The meshing of hydraulic end can be done by using HYPERMESH.

By considering theory of thick cylinder the principal stresses in the hydraulic end are find out. While doing the analysis of hydraulic end only one cylinder is considered. The results are validated by comparing it with analytical results.

A. *Analytical Calculation of Principal Stresses for Validation.*

When the ratio of the inner diameter of the cylinder to the wall thickness is less than 15, the cylinder is said tobe thick-walled.

At the inner surface of the cylinder,

$$r = \frac{D_i}{2}$$

$$D_i = 24 \text{ mm}$$

$$D_o = 32.5 \text{ mm}$$

$$P_i = 60\text{Bar} = 6 \text{ Mpa}$$

$$\sigma_r = -P_i = -6 \text{ Mpa}$$

The negative sign is introduced in the expression for σ_r, since it denotes compressive stress.

Tangetial Stress,

$$\sigma_t = \frac{P_i(D_{i2}+D_{o2})}{(D_{o2}-D_{i2})} \qquad (2)$$

= 20.39 Mpa

Principal Stress in axial direction, [8]

$$\sigma_l = \frac{P_i D_i^2}{(D_o^2-D_i^2)} \qquad (3)$$

= 7.196 Mpa

B. *Finite Element Analysis using ABAQUS*

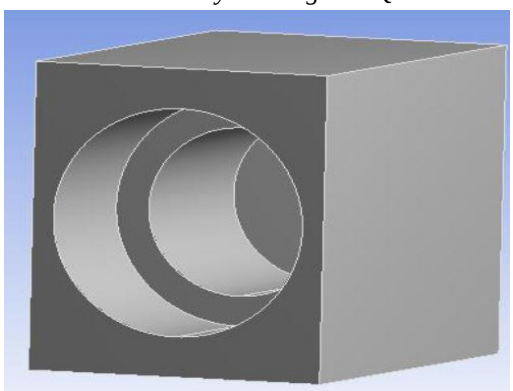

Fig. 7 CATIA Model

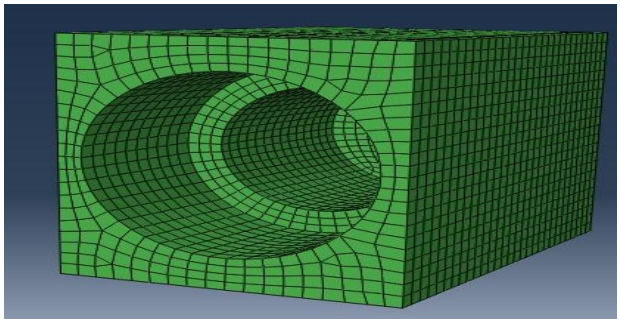

Fig.8 Meshing Diagram

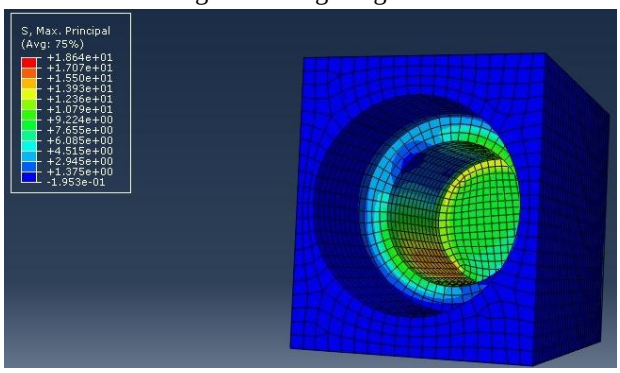

Fig. 9 Maximum Principal Stress

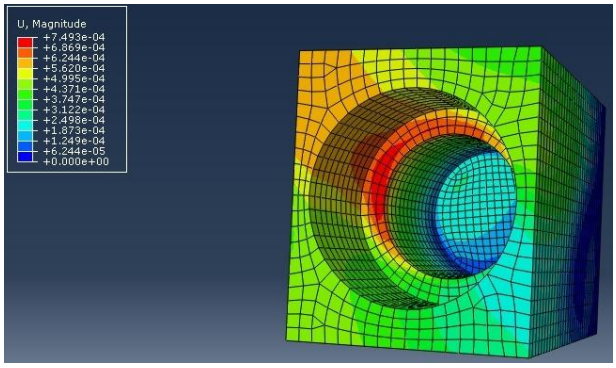

Fig. 10 Total Deformation

Mesh Element- Brick Element
Number of Nodes = 12852
Number of Elements =10470
Maximum Principal Stress = 18.64 Mpa

V. CONCLUSION

Modified Hydraulic End consists of Suction Chamber, Delivery Chamber, and a Valve Box as a single unit. This reduces possibility of leakage as well as bending of delivery chamber. The proposed design will fascilate maintenance of the valves without dismaintailing suction and discharge pipelines which meets the requirement set by API- 674 standard. Maximum principal stress calculated by using analytical method is 20.39 Mpa and by using FEA, result maximum principal stress is 18.64 Mpa.

ACKNOWLEDGMENT

Thanks to Mr. Ratnakar Bagul (Dampf Kolben Engg Corporation), Dr. S.S.Chinchanikar (HOD) for their valuable contribution in developing this article.

NOMENCLATURE

A = Cross section area of plunger.
D = Diameter of plunger.
N = Speed of motor.
Q = Discharge.
S = Stroke.
n = Number of plungers.
Di = Inner diameter of cylinder.
Do = Outer diameter of cylinder.
σ_r = Radial Stress.
σ_t = Tangetial Stress.
σ_l = Longitudinal Stress

REFERENCES

[1] Igor J. Karassic, Joseph P. Messina, Paul Cooper, Charles C. Heald, “Pump Handbook,” Third edition McGraw Hill, pp. 493-526.
[2] Mohammed Diany, Abdel-Hakim Bouzid, “Analytical evaluation of stresses and displacements of stuffing-box packing based on a flexibility analysis, “Tribology International 2009, pp 980-986.
[3] Song Pengyun, Chen Kuangmin and Dong Zongyun,” A theoretical analysis of the lateral pressure coefficients in a soft-packed stuffing-box seal,” Tribology International Vol 30, 1997, pp. 759-765.
[4] YA. Z. Gaft, V. G. Krivonogov and V. A. Petushkov,”Investigation into the mechanism of sealing in shaft stuffing boxes,” December 1988, pp. 39-48.
[5] W. OchoAski, “Radial stress distribution and friction forces in a soft-packed stuffing-box seal, “Tribology International 1988, pp. 1-8.
[6] Ross Mackay, 2004, “The Practical Pumping Hand book,” pp. 87-106
[7] Leela Krishna Vegi, Venu Gopal Vegi , “Design and Analysis of Connecting Rod using Forged Steel,“International Journal of Scientific and Engineering Research, Vol 4, June 2013, pp. 2083-2085
[8] V.B. Bhandari, “Design of Machine Elements, “ Ninth edition Tata McGraw Hill, 2000, pp.648-657
[9] American Petroleum Institute, “API standard 674: Positive Displacement Pumps- Reciprocating,” November- 2006